Responding to Error Messages

Error Message List

This section lists the error messages that are displayed in VPanel. If the action described here does not correct the problem or if an error message not described here appears, contact your authorized Roland DG Corporation dealer.

Error number	Message	Action	Error level
1000-****	The % limit switch was not found.	P. 152	Level 3
1006-02**	The % axis position has been shifted.	P. 152	Level 2
101C-0000	The milling bur sensor was not found.	P. 153	Level 3
101D-000*	The % milling bur cannot be released.	P. 153	Level 2
101D-010*	The % milling bur cannot be released. It might be broken from the root.	P. 154	
101E-000*	The % milling bur might be broken.	P. 155	
101F-000*	The % milling bur chucking has slipped out.	P. 156	
1020/1021-000*	The % milling bur is too long/too short.	P. 157	Level 1
1022-000*	The % milling bur was not found.	P. 158	
1023-0000 1024-0000 1025-0000 1026-0000 1027-0000 1028-0000	Milling data error.	P. 159	Level 2
1029-0000	The spindle experienced an overload.	P. 160	Level 3
102A-000*	The spindle experienced overcurrent.	P. 161	
102B-0000	The spindle motor temperature is too high.	P. 162	
102E-0000	The mechanical part has collided.	P. 162	
1033-000*	The coolant has run out.	P. 163	Level 1
1034-0000	The coolant tank is not installed.	P. 163	
1038-0000	Milling data error. No milling bur is selected.	P. 165	Level 2
103A-000*	DANGER!! The coolant is leaking!!	P. 165	Level 3
103B-0000	The automatic correction is not yet finished.	P. 166	Level 2
103D-0000	Milling data error. The milling bur cannot reach the milling position.	P. 166	
105E-0000	The pressure of the compressed air is too high or low.	P. 167	Level 1
****-****	An unknown error occurred.	P. 167	Level 3

Error level

Level 1 This is an error that is not very serious. After the cause of the error is eliminated, milling can resume from the point where it stopped.

Level 2 This is an error that is moderately serous. After the cause of the error is eliminated, milling can be restarted from the beginning. It is not possible to resume milling from the point where it stopped.

Level 3 This is an error that is very serious. Before eliminating the cause of the error, it is necessary to turn the power off.

"1000-****" The % limit switch was not found.

* The name of the axis (X, Y, Z, A, or a combination of these axes) is displayed for %.

Level 3

Situation/Error Cause

- Operation is inhibited by milling waste or an obstruction.

Procedure

1. **Turn off the power.**
2. **Remove any objects blocking operation of the machine and any accumulated milling waste.**
3. **Turn on the power, and then resume operation.**

"1006-02**" The % axis position has been shifted.

* The name of the axis (X, Y, Z, A, or a combination of these axes) is displayed for %.

Level 2

Situation/Error Cause 1

- Operation is inhibited by milling waste or an obstruction, and the motor position has been lost.

Procedure

1. **Remove any objects blocking operation of the machine and any accumulated milling waste.**
2. **Hold down the operation button on the built-in panel.**
   This will clear the error.

Situation/Error Cause 2

- The milling conditions are too strict.

Procedure

1. **Hold down the operation button on the built-in panel.**
   This will clear the error.
2. **Review the CAM settings and the shape specified in the CAD data.**

"101C-0000" The milling bur sensor was not found.

Level 3

Situation/Error Cause

- Operation is inhibited by milling waste or an obstruction in the vicinity of the milling bur sensor.

Procedure

1. **Turn off the power.**
2. **Remove any objects blocking operation of the machine and any accumulated milling waste in the vicinity of the milling bur sensor.**
3. **Turn on the power, and then resume operation.**

"101D-000*" The % milling bur cannot be released.

* The milling bur stocker number (1 to 7) is displayed for %.

Level 2

Situation/Error Cause 1

- The ATC magazine is dirty.
- The inside of the collet is dirty.

Procedure

1. **Follow the instructions in the VPanel window to open the collet and remove the milling bur.**
2. **Clean the ATC magazine.**

   ☞ P. 51 "Cleaning after Milling Finishes"
3. **Perform collet maintenance.**

   ☞ P. 44 "Collet Maintenance, Cleaning of Dummy Pin, and Checking of Coolant Flow Rate"

Situation/Error Cause 2

- The stocker is out of position.

Procedure

1. **Follow the instructions in the VPanel window to open the collet and remove the milling bur.**
2. **Perform automatic correction.**

   ☞ P. 56 "Correcting the Milling Machine"

If the Error Occurs Again

- The collet is deformed.

Procedure

1. **Replace the collet.**

   ☞ P. 83 "Replacing the Collet"

2. **Perform automatic correction.**

   ☞ P. 56 "Correcting the Milling Machine"

"101D-010*" The % milling bur cannot be released. It might be broken from the root.

* The milling bur stocker number (1 to 7) is displayed for %.

Level 2

Situation/Error Cause

- The milling bur is broken.
- The milling bur has exceeded its service life.

☞ P. 72 "Replacing Milling Burs"

Procedure

1. **Follow the instructions in the VPanel window to open the collet and remove the milling bur.**
2. **Replace the milling bur with a new one.**
3. **Perform collet maintenance.**

   ☞ P. 44 "Collet Maintenance, Cleaning of Dummy Pin, and Checking of Coolant Flow Rate"

4. **Perform automatic correction.**

   ☞ P. 56 "Correcting the Milling Machine"

Situation/Error Cause 2

- The milling conditions are too strict.

Procedure

1. **Hold down the operation button on the built-in panel.**

   This will clear the error.

2. **Review the CAM settings and the shape specified in the CAD data.**

If the Error Occurs Again

- The collet is deformed.

Procedure

1. **Replace the collet.**

☞ P. 83 "Replacing the Collet"

2. **Perform automatic correction.**

☞ P. 56 "Correcting the Milling Machine"

"101E-000*" The % milling bur might be broken.

* The milling bur stocker number (1 to 7) is displayed for %.

Level 2

Situation/Error Cause 1

- The milling bur is broken.
- The milling bur has exceeded its service life.

☞ P. 72 "Replacing Milling Burs"

Procedure

1. **Hold down the operation button on the built-in panel.**

This will clear the error.

2. **Replace the milling bur with a new one.**
3. **Perform collet maintenance.**

☞ P. 44 "Collet Maintenance, Cleaning of Dummy Pin, and Checking of Coolant Flow Rate"

Situation/Error Cause 2

- The milling conditions are too strict.

Procedure

1. **Hold down the operation button on the built-in panel.**

This will clear the error.

2. **Review the CAM settings and the shape specified in the CAD data.**

If the Error Occurs Again

- The collet has worn out, leading to a decrease in its retention capabilities.

Procedure

1. **Replace the collet.**

☞ P. 83 "Replacing the Collet"

2. **Perform automatic correction.**

☞ P. 56 "Correcting the Milling Machine"

"101F-000*" The % milling bur chucking has slipped out.

* The milling bur stocker number (1 to 7) is displayed for %.

Level 2

Situation/Error Cause 1

- The milling bur has exceeded its service life.

☞ P. 72 "Replacing Milling Burs"

Procedure

1. **Hold down the operation button on the built-in panel.**

This will clear the error.

2. **Replace the milling bur with a new one.**

3. **Perform collet maintenance.**

☞ P. 44 "Collet Maintenance, Cleaning of Dummy Pin, and Checking of Coolant Flow Rate"

Situation/Error Cause 2

- The milling conditions are too strict.

Procedure

1. **Hold down the operation button on the built-in panel.**

This will clear the error.

2. **Review the CAM settings and the shape specified in the CAD data.**

If the Error Occurs Again

- The collet has worn out, leading to a decrease in its retention capabilities.

Procedure

1. **Replace the collet.**

☞ P. 83 "Replacing the Collet"

2. **Perform automatic correction.**

☞ P. 56 "Correcting the Milling Machine"

"1020/1021-000*" The % milling bur is too long/too short.

* The milling bur stocker number (1 to 7) is displayed for %.

Level 1

Situation/Error Cause

- A milling bur that cannot be used with this machine has been used.
- The milling bur holder is not in the correct position.

Procedure

1. **Attach a usable milling bur.**

☞ P. 28 "Step 2: Setting Milling Burs"

2. **According to the situation, perform the operations shown below.**

When the error occurred during milling

Press the operation button on the built-in panel.
Milling will resume.

When the error occurred outside of milling

Hold down the operation button on the built-in panel.
This will clear the error.

"1022-000*" The % milling bur was not found.

* The milling bur stocker number (1 to 7) is displayed for %.

Level 1

Situation/Error Cause 1

- The milling bur has not been set.
- The milling bur has been set in an incorrect stocker number.

Procedure

1. **Set the milling bur in the correct position.**
2. **According to the situation, perform the operations shown below.**

   When the error occurred during milling

   Press the operation button on the built-in panel.
   Milling will resume.

   When the error occurred outside of milling

   Hold down the operation button on the built-in panel.
   This will clear the error.

Situation/Error Cause 2

- The ATC magazine is out of position.

Procedure

Perform automatic correction.

☞ P. 56 "Correcting the Milling Machine"

If the Error Occurs Again

The collet may have worn out. Replace the collet.

☞ P. 83 "Replacing the Collet"

If the error occurs again even after you replace the collet, replace the spindle unit. To replace the spindle unit, contact your authorized Roland DG Corporation dealer.

"1023-0000 to 1028-0000" Milling data error.

Level 2

- **1023-0000: Milling data error. The number of parameters is incorrect.**
- **1024-0000: Milling data error. The parameter is out of range.**
- **1025-0000: Milling data error. A wrong command is detected.**
- **1026-0000: Milling data error. The address is not defined.**
- **1027-0000: Milling data error. The parameter is not defined.**
- **1028-0000: Milling data error. The operation cannot be executed.**

Situation/Error Cause

- There is a problem with the milling data received from the computer.
- The data transfer has failed due to the computer being under a high load.

Procedure

1. **Hold down the operation button on the built-in panel.**

   This will clear the error.

2. **Check the milling data.**

   If necessary check the CAM settings and the shape in the CAD data.

   If there are no problems with the milling data

   ① **Exit any applications that are not being used.**

   ② **Restart the computer.**

   ③ **Perform milling again.**

"1029-0000" The spindle experienced an overload.

Level 3

Situation/Error Cause 1

- The milling bur is worn.
- A workpiece that cannot be milled by the machine is being used.
- The milling conditions are too strict.

Procedure

1. **Turn off the power.**
2. **Check the milling bur, the workpiece, and the CAM settings as well as the shape specified in the milling data.**
3. **Allow the machine to rest for some time before turning the power on.**
   The motor may have overheated.

Situation/Error Cause 2

- Milling waste has adhered to the spindle.

Procedure

Perform spindle run-in (long).

☞ P. 95 "Spindle Run-In (Long)"

If the Error Occurs Again

There is a possibility that the spindle unit is defective. To replace the spindle unit, contact your authorized Roland DG Corporation dealer.

"102A-000*" The spindle experienced overcurrent.

Level 3

Situation/Error Cause 1

- The milling bur is worn.
- A workpiece that cannot be milled by the machine is being used.
- The milling conditions are too strict.

Procedure

1. **Turn off the power.**
2. **Check the milling bur, the workpiece, and the CAM settings as well as the shape specified in the milling data.**
3. **Allow the machine to rest for some time before turning the power on.**
   The motor may have overheated.

Situation/Error Cause 2

- Coolant is not applied to the middle of the milling bur.

Procedure

Clean the coolant nozzles.

☞ P. 70 "Cleaning the Coolant Nozzle"

Situation/Error Cause 3

- Milling waste has adhered to the spindle.

Procedure

Perform spindle run-in (long).

☞ P. 95 "Spindle Run-In (Long)"

If the Error Occurs Again

There is a possibility that the spindle unit is defective. To replace the spindle unit, contact your authorized Roland DG Corporation dealer.

"102B-0000" The spindle motor temperature is too high.

Level 3

Situation/Error Cause 1

- The milling bur is worn.
- A workpiece that cannot be milled by the machine is being used.
- The milling conditions are too strict.

Procedure

1. **Turn off the power.**
2. **Check the milling bur, the workpiece, and the CAM settings as well as the shape specified in the milling data.**
3. **Allow the machine to rest for some time before turning the power on.**
   The motor may have overheated.

Situation/Error Cause 2

- Milling waste has adhered to the spindle.

Procedure

Perform spindle run-in (long).

☞ P. 95 "Spindle Run-In (Long)"

If the Error Occurs Again

There is a possibility that the spindle unit is defective. To replace the spindle unit, contact your authorized Roland DG Corporation dealer.

"102E-0000" The mechanical part has collided.

Level 3

Situation/Error Cause

- Operation is inhibited by milling waste or an obstruction.

Procedure

1. **Turn off the power.**
2. **Remove any objects blocking operation of the machine and any accumulated milling waste.**
3. **Turn on the power.**

"1033-000*" The coolant has run out.

Level 1

Situation/Error Cause

- The coolant tank is not filled with the appropriate amount of coolant.
- The coolant filters or coolant lines are clogged.

Procedure

1. **Fill the coolant tank with the appropriate amount of coolant.**

   ☞ P. 65 "3. Pour in the new coolant."

2. **According to the situation, perform the operations shown below.**

   When the error occurred during milling

   Press the operation button on the built-in panel.
   Milling will resume.

   When the error occurred outside of milling

   Hold down the operation button on the built-in panel.
   This will clear the error.

If the Error Occurs Again

Perform the operations shown below.

☞ P. 72 "Replacing Coolant Filters"
☞ P. 61 "Replacing the Coolant"

"1034-0000" The coolant tank is not installed.

Level 1

Situation/Error Cause

- The coolant tank has been removed during coolant operation.

Procedure

1 Install the coolant tank.

Push the coolant tank to the point where you feel a click.

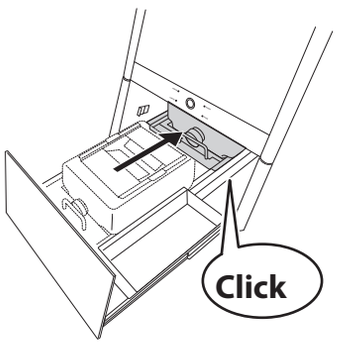

Point

Align the ▷ label affixed to the right side of the tank with the ◁ label affixed to the machine.

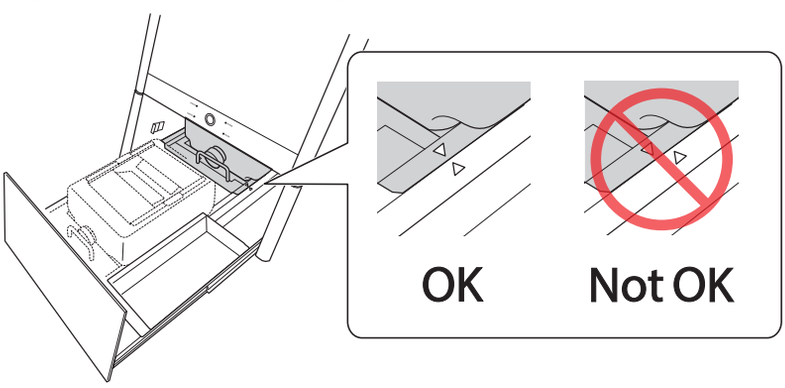

Important

Move the coolant tank slowly. Forcefully moving the coolant tank may cause the coolant to spray out.

2 According to the situation, perform the operations shown below.

When the error occurred during milling

Press the operation button on the built-in panel.

Milling will resume.

When the error occurred outside of milling

Hold down the operation button on the built-in panel.

This will clear the error.

"1038-0000" Milling data error. No milling bur is selected.

Level 2

Situation/Error Cause

- There is a problem with the milling data.

Procedure

1. **Hold down the operation button on the built-in panel.**
   This will clear the error.
2. **Check the milling data.**
   If necessary check the CAM settings and the shape in the CAD data.

"103A-000*" DANGER!! The coolant is leaking!!

Level 3

Situation/Error Cause

- Fluid is leaking inside the machine.

Procedure

1. **Turn off the power.**
2. **Unplug the power cable.**
   Contact your authorized Roland DG Corporation dealer.

"103B-0000" The automatic correction is not yet finished.

Level 2

Situation/Error Cause

- Automatic correction has not been performed.
- Automatic correction was cancelled before it could finish.
- Automatic correction was not performed after updating the firmware to a version that required automatic correction to be performed again.
- The versions of VPanel and the machine's firmware do not match.

Procedure

1. **Hold down the operation button on the built-in panel.**
   This will clear the error.
2. **Download the latest versions of VPanel and the machine's firmware, and then install these versions.**
   If you have already upgraded the version, proceed to the next step.
   ☞ DGSHAPE Corporation website (http://www.dgshape.com/)
3. **Perform automatic correction.**
   ☞ P. 56 "Correcting the Milling Machine"

"103D-0000" Milling data error. The milling bur cannot reach the milling position.

Level 2

Situation/Error Cause

- The milling bur is too short to reach the milling position.
- In the milling data that has been sent, the movement in the negative direction along the Z axis is outside the movement range.

Procedure

1. **Hold down the operation button on the built-in panel.**
   This will clear the error.
2. **Check the milling data.**
3. **Review the milling bur length and the position of the milling bur holder.**
   ☞ P. 28 "Step 2: Setting Milling Burs"

"105E-0000" The pressure of the compressed air is too high or low.

Level 1

Situation/Error Cause

- Compressed air is not being supplied.
- The regulator settings are incorrect.

Procedure

1. **Adjust the regulator so that compressed air with the appropriate pressure (0.18 MPa to 0.22 MPa) can be supplied.**

   ☞ Setup Guide

2. **According to the situation, perform the operations shown below.**

   When the error occurred during milling

   Press the operation button on the built-in panel.
   Milling will resume.

   When the error occurred outside of milling

   Hold down the operation button on the built-in panel.
   This will clear the error.

"****-****" An unknown error occurred.

Level 3

Procedure

1. **Turn off the power.**
2. **Turn on the power.**

If the Error Occurs Again

Contact your authorized Roland DG Corporation dealer.